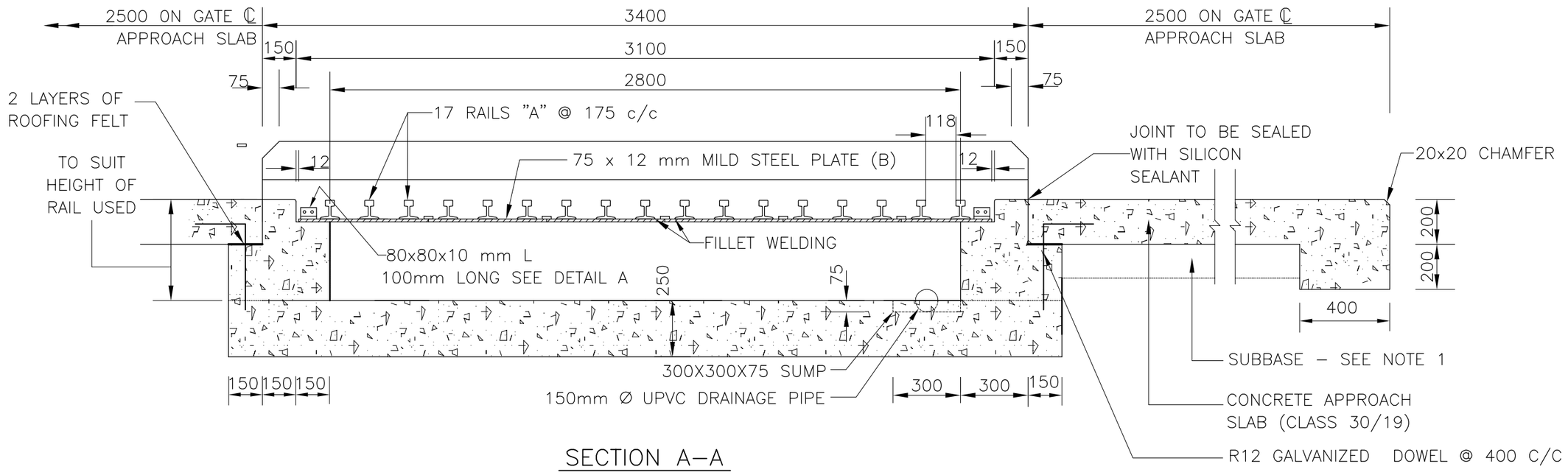

SECTION A–A

NOTES :

1. THE 150mm THICK SUBBASE BELOW THE CONCRETE APPROACH SLAB SHALL COMPLY WITH THE FOLLOWING :

   a) WET MICRO/MACRO CLIMATE
   STABILISED WITH A MINIMUM OF 2% BY MASS (3% BY VOLUME) PORTLAND CEMENT SO AS TO ENSURE AN UNCONFINED COMPRESSION STRENGTH OF 0,75Mpa MIN. AND 3,0Mpa MAX. AT 100% MOD.AASHTO DENSITY AFTER 7 DAYS (C3 TO C4 PER TRH14).

   b) DRY/MODERATE CLIMATE
   UNSTABILISED SUBBASE TO HAVE A MINIMUM CBR OF 45 AT 95% MOD. AASHTO DENSITY AND TO BE COMPACTED TO 97% MOD.AASHTO DENSITY IN SITU.

2. REFER TO DWG. No. WCS/55/2/C4 FOR ALTERNATIVE METHOD OF FIXING RAILS WHEN WELDING PLANT IS NOT AVAILABLE ON SITE.

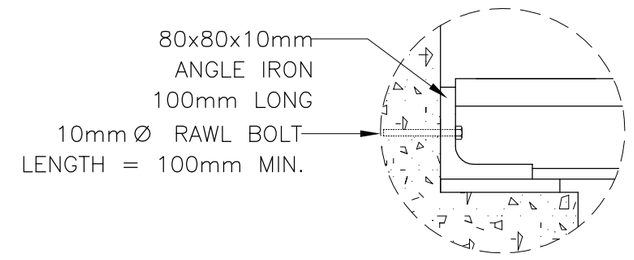

DETAIL A

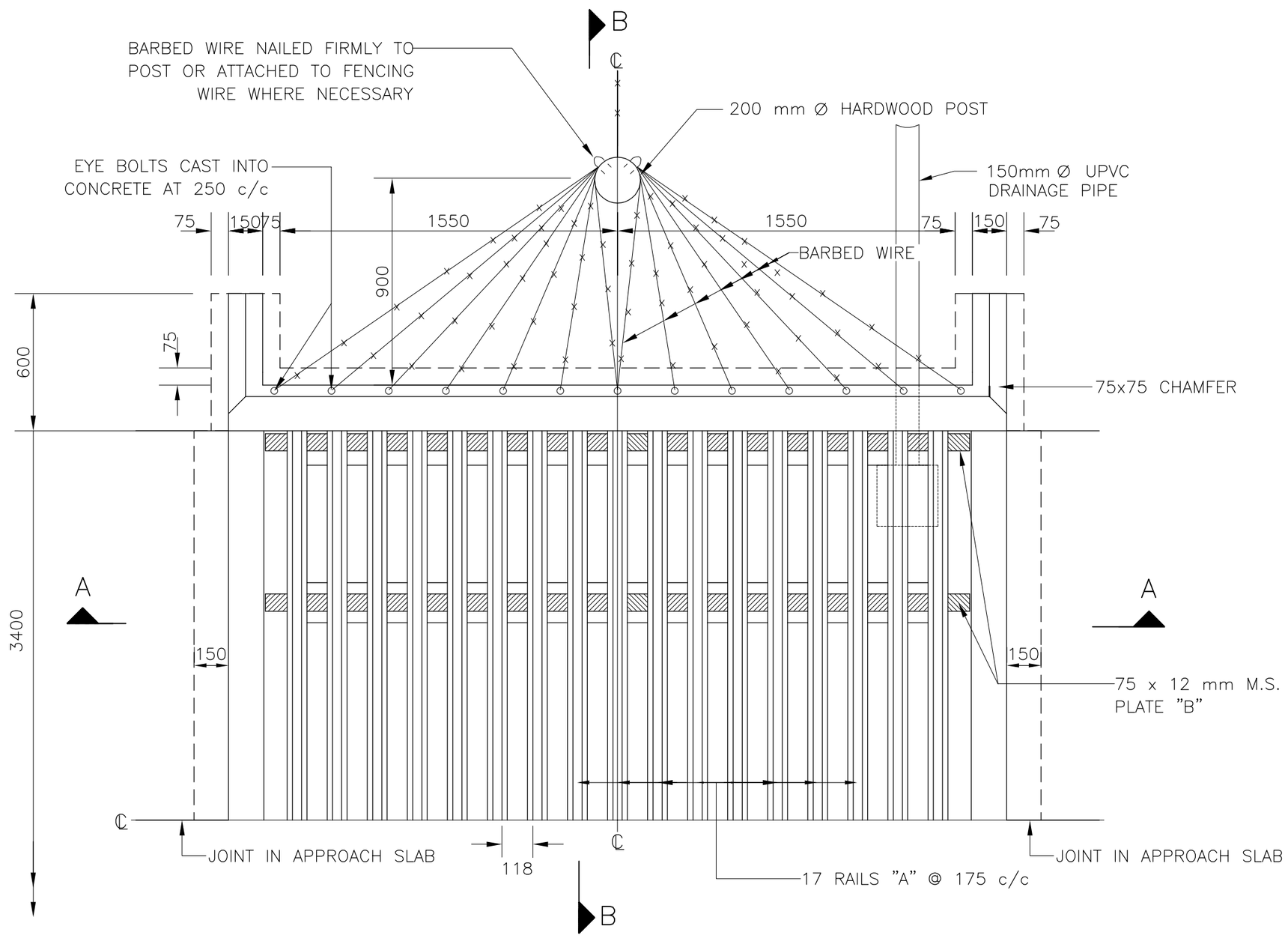

HALF PLAN

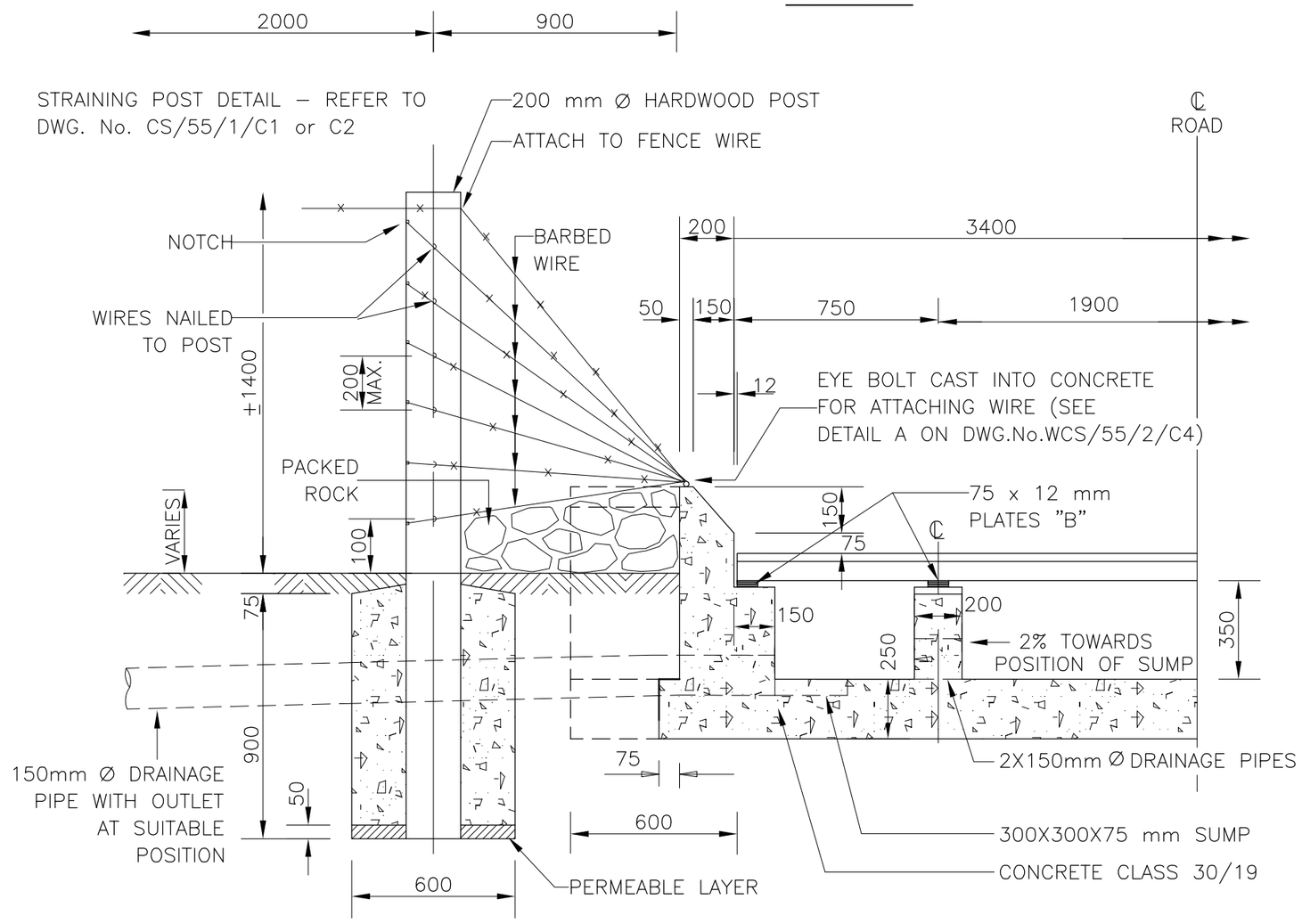

SECTION B–B

No.	DATE	ADDITIONS AND AMENDMENTS	APPROVED	DATE

Issue Date: MARCH 2013

STANDARD PLANS

WESTERN CAPE GOVERNMENT
DEPARTMENT OF TRANSPORT AND PUBLIC WORKS

L.G.FOURIE
CHIEF DIRECTOR
ROAD NETWORK MANAGEMENT

MOTOR GRID GATES

SINGLE MOTOR GRID GATE TYPE A

SCALE : N.T.S.

A2 ORIGINAL

INDEX NO. WCS/55/2/C2

Figure 3